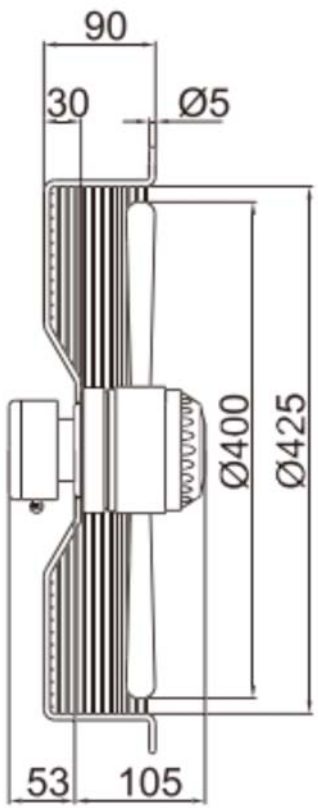

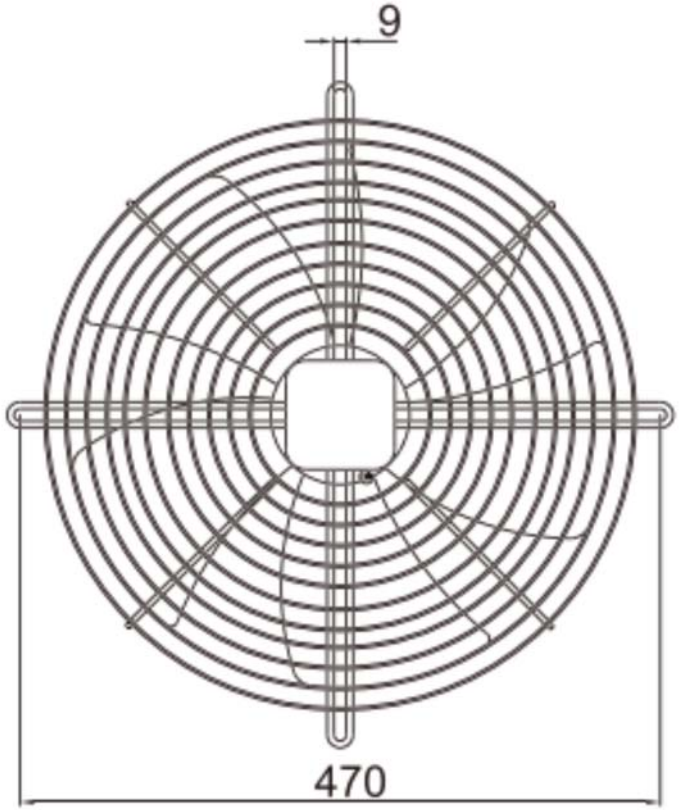

Suction

Direction of airflow "S"

SPECIFICATION	
VOLTAGE (V)	220
CURRENT (A)	2.2
SPEED (r/min)	2350
FREQUENCY (Hz)	50
INPUT POWER (W)	450

Mark	Qty	Sign	Name	Date	Stage Mark		
					S		
					A1		
					Design	GUO	20250726
					Audit		
					Technical		
					Standard		
					Approve		

Material		Ratio	1:2.5	Weight	

Ningbo Longwell Electric Technology Co., Limited

LWAA2E400S-5MEB-27

第 1 页 共 1 页