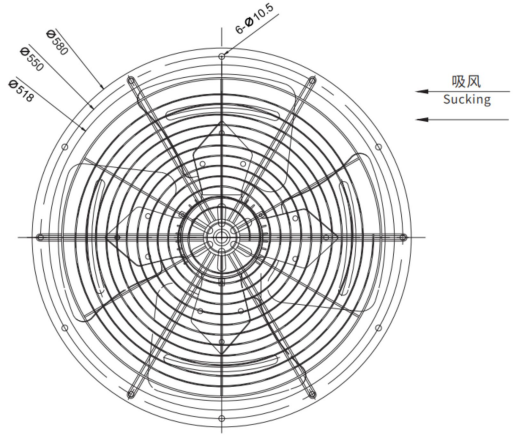

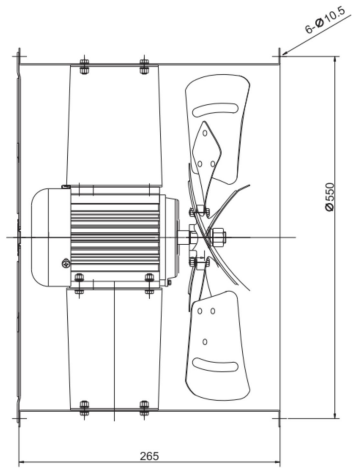

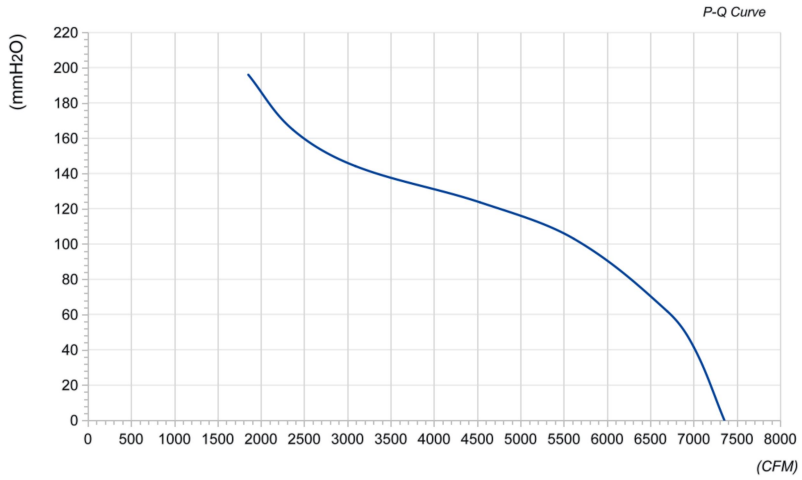

	CURRENT (A)	POWER (W)	SPEED (RPM)	STATIC PRESSURE (Pa)	Air volume (m^3/h)	Full pressure (Pa)
1	1.67	864	1382	196	2327	225
2	1.65	839	1375	140	3766	159
3	1.63	801	1398	100	4228	142
4	1.55	687	1413	60	6059	119
5	1.5	626	1420	0	7360	58

SPECIFICATION

VOLTAGE (V)	380
FREQUENCY (Hz)	50
CURRENT (A)	1.5
SPEED (r/min)	1420
AIR VOLUME (m^3/h)	7360
PROTECTION CLASS:	IP54
INSULATION CLASS:	F
MOTOR POWER (W)	550

Technical requirements

1. The flange of the cylinder should be flat, and the surface is not allowed to have traces of roller crushing and hammer marks
2. Ensure the width and concentricity of the flange flange, and do small curl processing on the flange edge.
3. The welding of cylinder and support plate should comply with the provisions of JB/TQ330-1023
4. Motor 0.55KW-4 , protection grade IP54
5. The motor bearing adopts high temperature grease, and the operating temperature is -40℃-60℃
6. This motor with heat protection,cut off temperature: 140° C,replacementature 100℃-120℃

Mark	Qty	Sign	Name	Date			
					Stage Mark		
					S		
					A1		
					Design	ZHONG	20230624
					Audit		
					Technical		
					Standard		
					Approve		

Material		Ratio	1:1
Weight			

Ningbo Longwell Electric Technology Co., Limited

LWAA4D-500-01

第 1 页 共 1 页