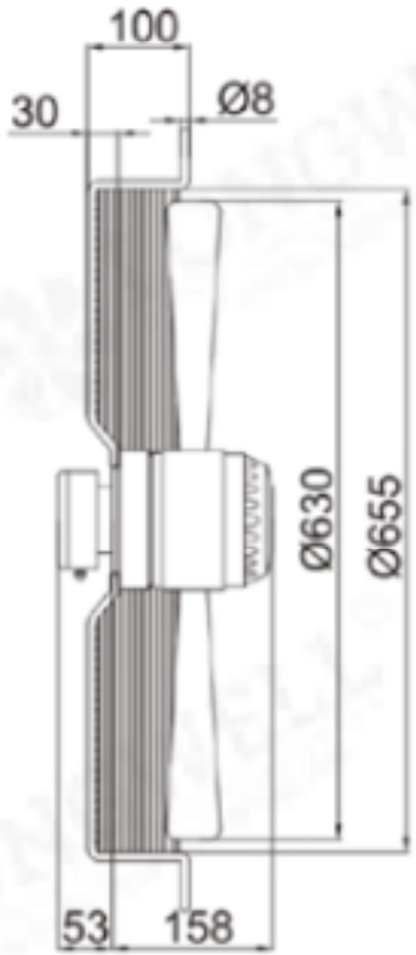

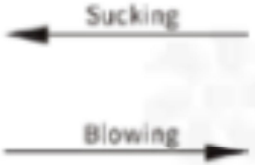

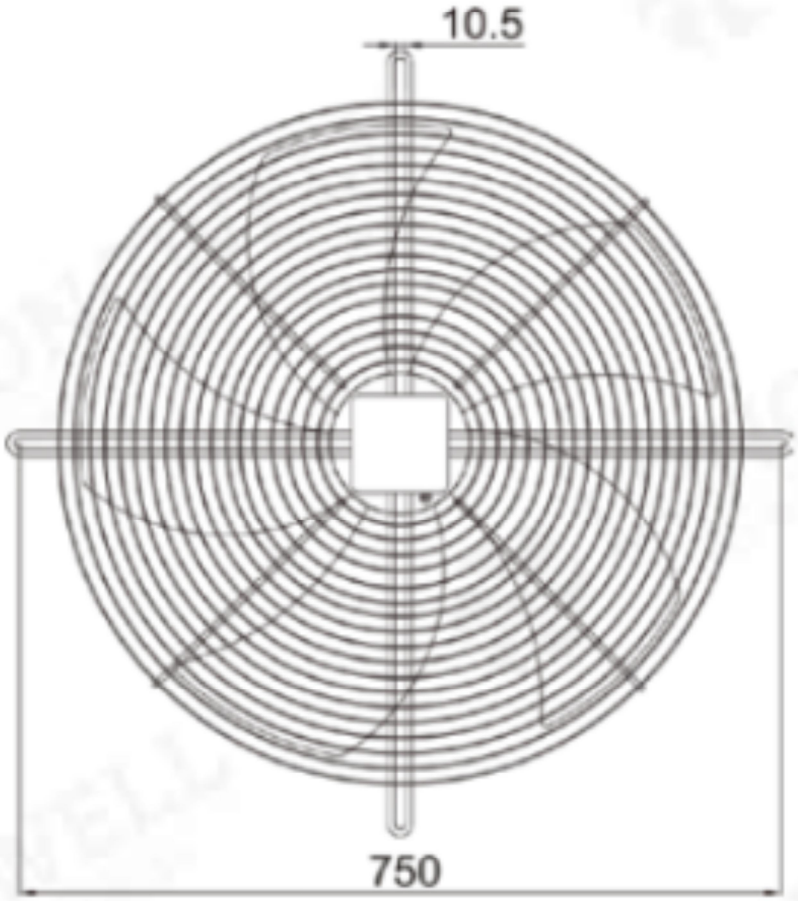

Technical requirements

Voltage (V)	230
Frequency (Hz)	50
Current (A)	3.7
Rotate speed (r/min)	1350
Power (W)	800
Wind velocity (m^3/h)	12221

Mark	Qty	Sign	Name	Date	Stage Mark		
					S		
					A1		
					Design	HE	20250618
					Audit		
					Technical		
					Standard		
					Approve		

Material | Ratio 1:1 | Weight

Ningbo Longwell Electric Technology Co., Limited

LWAA4E630S-5MEB-19

第 1 页 共 1 页