AXIAL FAN - AC

LWAA6D710S-7MEB-12

Ningbo Longwell Electric Technology CO.,LTD

NO.100, Ditang District ,Yuyao,Zhejiang Province,China 315400

Phone 86 574 6218 9863

Fax 86 574 6218 9863

sales@zjlongwell.com

www.longwellfans.com

Model No.:	LWAA6D710S-7MEB-12
Version Number:	A0
Make :	Wu
Review :	Duan
Approvd :	Zhang
Date:	20250610

技术专用
朗伟电器

Version number	Notes Remarks	Reason content	Revised by	Date

AXIAL FAN - AC

LWAA6D710S-7MEB-12

Nominal Data

Project1	Unit	Rating
Nominal Voltage :	[VAC]	380V (▲)
Voltage Range :	[VAC]	342~418
Frequency :	[Hz]	50
Speed :	[rpm]	920
Current :	[A]	2.8
Power input :	[W]	1200
Air flow (Max) :	[m3/h]	17510
	[CFM]	10300
Staticpressure(Max):	[Pa]	225
Noise level :	dB(A)	73
Capacitor :	μF	/
Max.ambient Temp :	℃	60
Min.ambient Temp :	℃	-30
Insulation Class :		Class F
Protection Type :		IP54
Work system :		S1

NINGBO LONGWELL ELECTRIC TECHNOLOGY CO.,LTD
Phone: 0086 574 6218 9863 FAX : 0086 574 6218 9863 www.longwellfans.com sales@zjlongwell.com

AXIAL FAN - AC

LWAA6D710S-7MEB-12

Technical Features

Service environment	Operating temperature：-30~60℃；Operating humidity：0 ~ 85 % RH Storing temperature：-40 ~ 80℃；Storing humidity：0 ~ 95 % RH Applicable altitude range：＜1000m
Life Expectance	30,000Hours(L10)，At 40℃ room, humidity 15%~65%RH.
Balancing	According to JB/T 9101-1999 requirements G6.3
Vibration of the fan	Test method accord with JB/T 8689
Installation method	Horizontal or vertical installation
Material	Cold-rolled sheet （Impeller）
Bearing	Maintenance-free deep groove ball bearings
Protection	Thermal protection: disconnection temperature: 150-160 °C Reset temperature: 100-130 °C
Production Reference standard	GB12350《Safety requirements of small power motors》 JB/T10562 《 Technical specification for general purposes axial fans》 EN60335-1《Household and similar electrical appliances-safety》 ISO5801-1997《Industrial fans-performance testing using standardized airways》 GB/T2888《Methods of Noise Measurement for Fans Blowers Compressors and Roots Blowers》
Certification	CE
Environmental protection	RoHS、Reach
Weight	/

NINGBO LONGWELL ELECTRIC TECHNOLOGY CO.,LTD
Phone: 0086 574 6218 9863 FAX : 0086 574 6218 9863 www.longwellfans.com sales@zjlongwell.com

AXIAL FAN - AC

LWAA6D710S-7MEB-12

Product Drawing

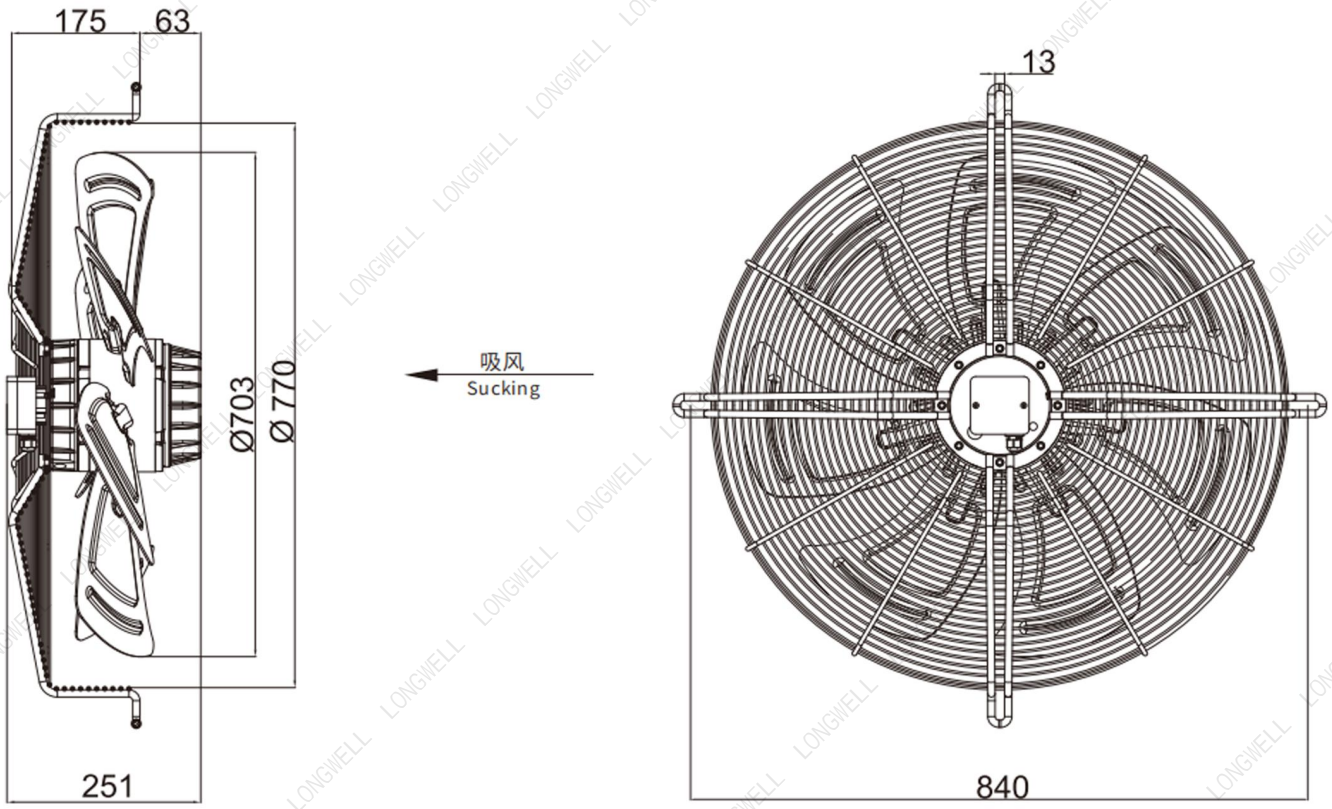

NINGBO LONGWELL ELECTRIC TECHNOLOGY CO.,LTD
Phone: 0086 574 6218 9863 FAX : 0086 574 6218 9863 www.longwellfans.com sales@zjlongwell.com

AXIAL FAN - AC	LWAA6D710S-7MEB-12

Wiring Diagram

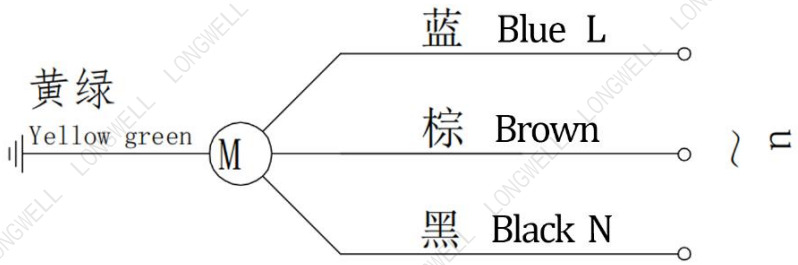

Label

Confirm by sales team when placing sample order or bulk order

NINGBO LONGWELL ELECTRIC TECHNOLOGY CO.,LTD
Phone: 0086 574 6218 9863 FAX : 0086 574 6218 9863 www.longwellfans.com sales@zjlongwell.com

AXIAL FAN - AC

LWAA6D710S-7MEB-12

Charts :Air Flow (P-Q)

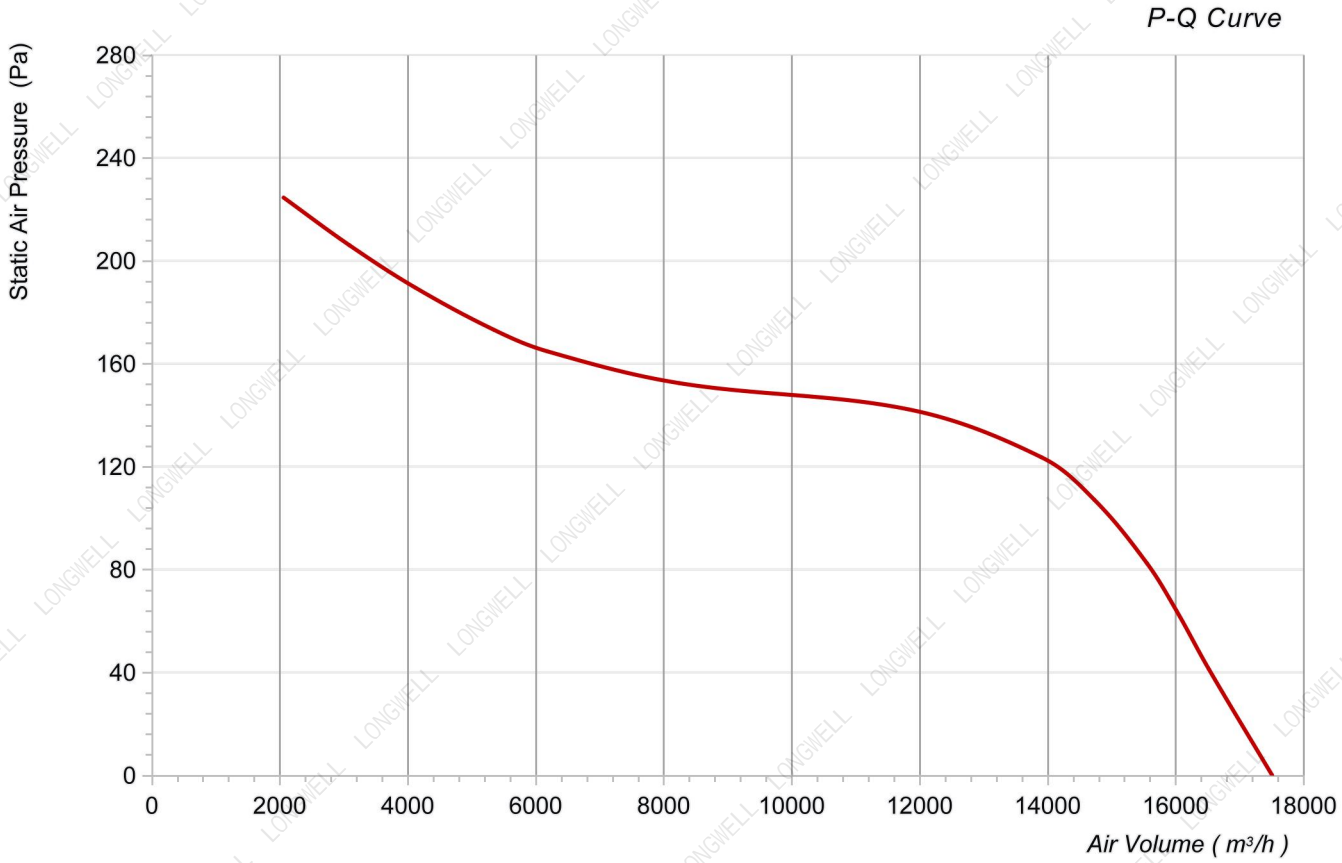

NINGBO LONGWELL ELECTRIC TECHNOLOGY CO.,LTD
Phone: 0086 574 6218 9863 FAX : 0086 574 6218 9863 www.longwellfans.com sales@zjlongwell.com

AXIAL FAN - AC	LWAA6D710S-7MEB-12

Warning:

1.The fan and motor must be used within the prescribed scope of temperature and humidity otherwise it will cause an unexpected damage.

2. Fan is not set wrong connection protection，Provide the right voltage and line sequence according to the nameplate otherwise it will damage the product.

3. Wiring depends on the wiring diagram and please connect the earth ground if required. We don't suggest to use the extension cord .Any wrong connection may cause the damage of the fan.

4. Be careful when moving the fan and do not take the blades as a handle because it will cause the distortion and chatter.

5. Connect the thermostat if required otherwise it would damage the motor because of the over temperature.

6. The length of the mounting screws shall not exceed the requirement, otherwise the fan will be damaged.

7. Do not disassemble the fan arbitrarily. It may hurt the capacity of water tightness and dynamic balance or cause other serious problems.

8. The over current protector is necessary in case the damage from the over current.

9. Install the fan as required, any other installing direction would affect the service life of the product.

10. The fan with inlet ring should be installed follow the requirements or it will affect the performance.

11. Users should use the standard cable when install the fan otherwise it will affect the water tightness.

12. The fan should keep away from the children especially the blade and electric parts .And the children are not allowed to operate the fan alone.

13. Do not connect the white signal cable directly to the red signal cable or the external DC power supply. Otherwise, the fan may be damaged.T

14.Please do not perform extraction and insertion of the connector under revolution irrespective of power on and power on and power off , and the fan should not touch or move when running.

15. Do not lift the fan wire when taking the fan, and do not impact the bearing during the handling process.

16. The version change may not be notified, please ask our company for the latest version when necessary.

17.Please be informed that we are not responsible for any damage or accidents caused by violating above rules to install and operate the fan.

NINGBO LONGWELL ELECTRIC TECHNOLOGY CO.,LTD
Phone: 0086 574 6218 9863 FAX : 0086 574 6218 9863 www.longwellfans.com sales@zjlongwell.com

AXIAL FAN - AC	LWAA6D710S-7MEB-12

Approval

CUSTOMER APPROVAL

CUSTOMER SIGNATURE:	DATE :

Product Data Confirm :

NINGBO LONGWELL ELECTRIC TECHNOLOGY CO.,LTD
Phone: 0086 574 6218 9863 FAX : 0086 574 6218 9863 www.longwellfans.com sales@zjlongwell.com