EC Backward Centrifugal Fan

LWBE3G133-072PS-03

Ningbo Longwell Electric Technology CO.,LTD

NO.100, Ditang District ,Yuyao,Zhejiang Province,China 315400

Phone 86 574 6218 9863

Fax 86 574 6218 9863

sales@zjlongwell.com

www.longwellfans.com



Model No.:	LWBE3G133-072PS-03
Version Number:	A0
Make :	Jin
Review :	Zhong
Approvd :	Yao/Jiang
Date:	2023.06.25

技术专用
朗伟电器

Version number	Notes Remarks	Reason content	Revised by	Date

EC Backward Centrifugal Fan

LWBE3G133-072PS-03

Nominal Data

Project1	Unit	Rating
Nominal Voltage :	[VAC]	230
Voltage Range :	[VAC]	176~264
Frequency :	[Hz]	50/60
Speed :	[rpm]	4400
Current :	[A]	0.38
Power input :	[W]	53
Air flow (Max) :	[m3/h]	433
	[CFM]	255
Static pressure (Max) :	[Pa]	433
Noise level (LpA):	dB(A)	70
Max.ambient Temp :	℃	60
Min.ambient Temp :	℃	-25
Insulation Class :		Class B
Protection Type :		IP55
Work system :		S1

Technical Features

Production Reference standard	GB12350《Safety requirements of small power motors》 JB/T10563 《technical specification for general purposes centrifugal fans》 EN60335-1《Household and similar electrical appliances-safety》 ISO5801-1997《Industrial fans-performance testing using standardized airways》 GB/T2888《Methods of Noise Measurement for Fans Blowers Compressors and Roots Blowers》
Certification	CE ETL (UL 507:2017 Ed.10+R:27May2020，CSA C22.2#113:2018 Ed.11)
Environmental protection	RoHS、Reach

NINGBO LONGWELL ELECTRIC TECHNOLOGY CO.,LTD
Phone: 0086 574 6218 9863 FAX : 0086 574 6218 9863 www.longwellfans.com sales@zjlongwell.com

EC Backward Centrifugal Fan

LWBE3G133-072PS-03

Technical Features

Service environment	Operating temperature：-25~60℃；Operating humidity：5 ~ 90 % RH Storing temperature：-40 ~ 80℃；Storing humidity：≤95 % RH Applicable altitude range：＜1000m
Life Expectance	40,000Hours(L10)，At 40℃ room, humidity 15%~65%RH.
Balancing	According to JB/T 9101-1999 requirements G6.3
Vibration of the fan	Test method accord with JB/T 8689
Installation method	Horizontal or vertical installation
Material	PA6+GF30%　(Impeller)
Bearing	Maintenance-free deep groove ball bearings
Weight	APPROX　2 (Kg)

Electrical Protection

Speed Control	Control input 0~10VDC/PWM
VSP Control	Control signal VSP voltage range1VDC~9.5VDC (During normal operation, when the VSP voltage is below 0.8VDC, the motor switches from operating mode to standby mode)
PWM Control	PWM signal: frequency 1K ~ 10KHz, amplitude 10V,duty cycle 10% ~ 100% .
Signal Output	Tach output：2 Pulse/R；FG internal open circuit output, external pull-up resistor R, pull-up voltage V+
Auxiliary power output	Output 10VDC，Max Current 10mA
Protection	Current limiting protection 、Over-temperature protection、Over-current protection Locked-rotor protection
Soft start	Delay time <10 seconds to full speed
Serial Communication	/

NINGBO LONGWELL ELECTRIC TECHNOLOGY CO.,LTD
Phone: 0086 574 6218 9863　FAX : 0086 574 6218 9863　www.longwellfans.com　sales@zjlongwell.com

EC Backward Centrifugal Fan

LWBE3G133-072PS-03

Product Drawing

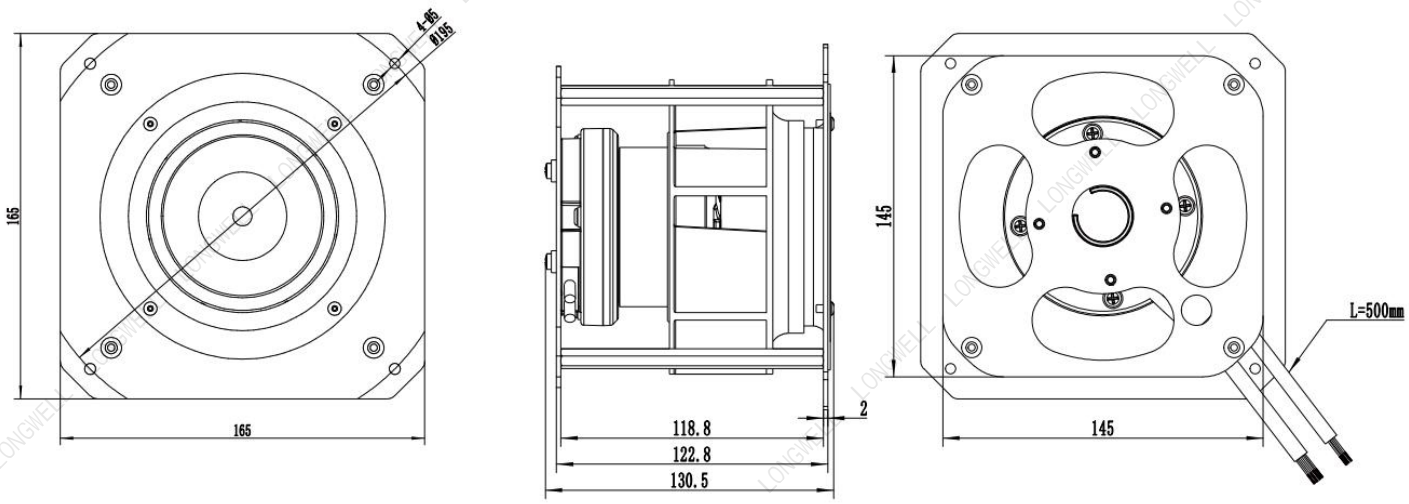

NINGBO LONGWELL ELECTRIC TECHNOLOGY CO.,LTD
Phone: 0086 574 6218 9863 FAX : 0086 574 6218 9863 www.longwellfans.com sales@zjlongwell.com

EC Backward Centrifugal Fan

LWBE3G133-072PS-03

Wiring Diagram

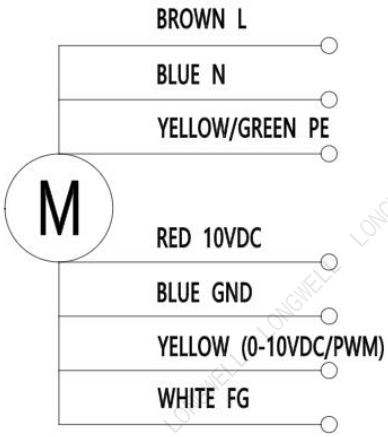

L	Color	Function	Functional description
L1	Brown	L	Live line
	Blue	N	Naught line
	Yellow/Green	PE	Ground lead
L2	Red	+10VDC	Fixed voltage output 10VDC,≦10mA
	Blue	GND	Ground reference end of control signal
	Yellow	Speed Control	Speed regulation signal input terminal,0-10VDC voltage /PWM
	White	FG	Speed feedback pulse output

Label

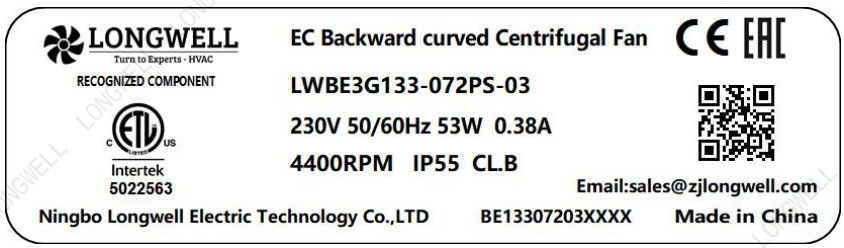

NINGBO LONGWELL ELECTRIC TECHNOLOGY CO.,LTD
Phone: 0086 574 6218 9863 FAX : 0086 574 6218 9863 www.longwellfans.com sales@zjlongwell.com

EC Backward Centrifugal Fan

LWBE3G133-072PS-03

Charts :Air Flow (P-Q)

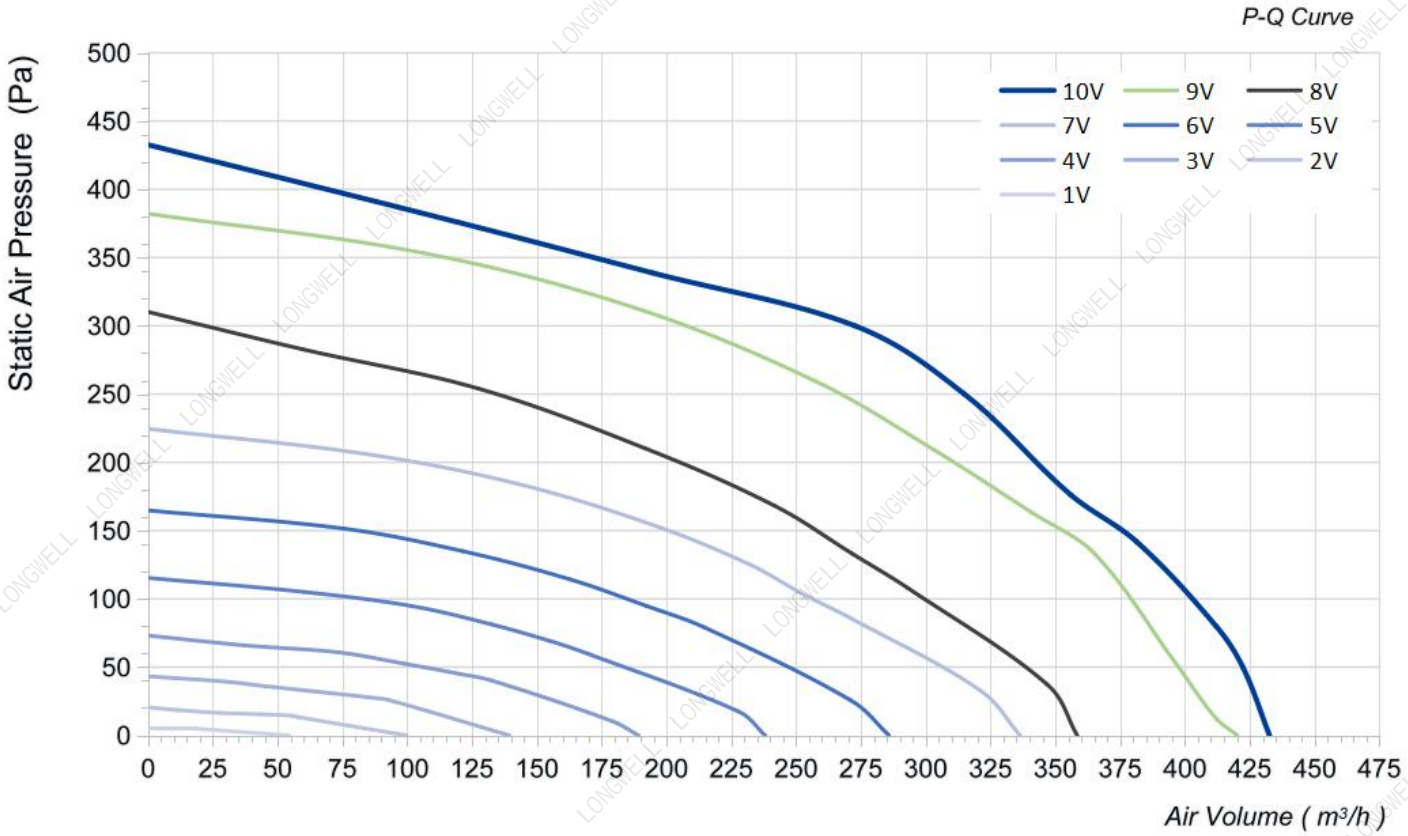

VSP	Speed(RPM)	Power input(W)	Airflow(m^3 /h)	Static pressure(Pa)
10V	4458	35	0	433
	4408	47	119	376
	4421	51	194	339
	4413	50	273	300
	4388	49	315	250
	4438	50	356	176
	4408	50	381	142
	4450	42	412	80
	4442	41	422	50
	4483	39	433	0

NINGBO LONGWELL ELECTRIC TECHNOLOGY CO.,LTD
Phone: 0086 574 6218 9863 FAX : 0086 574 6218 9863 www.longwellfans.com sales@zjlongwell.com

EC Backward Centrifugal Fan

LWBE3G133-072PS-03

VSP	Speed(RPM)	Power input(W)	Airflow(m^3 /h)	Static pressure(Pa)
9V	4325	31	0	382
	4288	41	106	353
	4267	45	188	313
	4233	46	257	260
	4275	44	303	209
	4229	47	340	164
	4233	46	365	134
	4283	39	397	53
	4292	36	412	12
	4275	36	420	0
8V	3804	23	0	310
	3750	30	60	283
	3738	32	127	254
	3725	33	192	210
	3729	31	242	168
	3750	31	272	133
	3729	32	293	108
	3754	29	347	37
	3775	27	358	0
7V	3329	15	0	225
	3254	21	84	206
	3225	23	142	184
	3229	24	194	155
	3229	22	232	126
	3242	22	252	104
	3238	23	271	85
	3250	20	321	33
	3263	19	336	0
6V	2846	12	0	165
	2788	15	76	151
	2788	15	121	135
	2775	16	163	114
	2767	16	192	95
	2767	15	214	79
	2804	15	271	26
	2800	13	286	0

NINGBO LONGWELL ELECTRIC TECHNOLOGY CO.,LTD
Phone: 0086 574 6218 9863 FAX : 0086 574 6218 9863 www.longwellfans.com sales@zjlongwell.com

EC Backward Centrifugal Fan

LWBE3G133-072PS-03

VSP	Speed(RPM)	Power input(W)	Airflow(m^3 /h)	Static pressure(Pa)
5V	2346	9	0	115
	2304	10	60	105
	2275	12	102	95
	2279	11	132	81
	2275	12	155	69
	2283	11	170	60
	2296	11	228	18
	2304	10	238	0
4V	1879	6	0	73
	1846	6	37	66
	1817	7	74	61
	1833	7	99	53
	1821	7	119	45
	1829	7	133	40
	1838	7	179	10
	1838	8	189	0
3V	1413	5	0	43
	1404	5	31	39
	1396	5	45	36
	1371	6	66	32
	1375	5	86	28
	1375	6	93	26
	1392	6	139	0
2V	971	4	0	21
	946	4	11	19
	950	4	28	16
	938	4	44	15
	958	4	55	14
	938	4	58	13
	950	4	100	0

NINGBO LONGWELL ELECTRIC TECHNOLOGY CO.,LTD
Phone: 0086 574 6218 9863 FAX : 0086 574 6218 9863 www.longwellfans.com sales@zjlongwell.com

EC Backward Centrifugal Fan

LWBE3G133-072PS-03

VSP	Speed(RPM)	Power input(W)	Airflow(m^3 /h)	Static pressure(Pa)
1V	504	3	0	5
	517	4	5	5
	500	3	12	5
	500	4	13	5
	504	3	19	5
	496	3	17	5
	508	3	54	0

NINGBO LONGWELL ELECTRIC TECHNOLOGY CO.,LTD
Phone: 0086 574 6218 9863 FAX : 0086 574 6218 9863 www.longwellfans.com sales@zjlongwell.com

EC Backward Centrifugal Fan

LWBE3G133-072PS-03

Warning:

1.The fan and motor must be used within the prescribed scope of temperature and humidity otherwise it will cause an unexpected damage.

2. Fan is not set wrong connection protection，Provide the right voltage and line sequence according to the nameplate otherwise it will damage the product.

3. Wiring depends on the wiring diagram and please connect the earth ground if required. We don't suggest to use the extension cord .Any wrong connection may cause the damage of the fan.

4. Be careful when moving the fan and do not take the blades as a handle because it will cause the distortion and chatter.

5. Connect the thermostat if required otherwise it would damage the motor because of the over temperature.

6. The length of the mounting screws shall not exceed the requirement, otherwise the fan will be damaged.

7. Do not disassemble the fan arbitrarily. It may hurt the capacity of water tightness and dynamic balance or cause other serious problems.

8. The over current protector is necessary in case the damage from the over current.

9. Install the fan as required, any other installing direction would affect the service life of the product.

10. The fan with inlet ring should be installed follow the requirements or it will affect the performance.

11. Users should use the standard cable when install the fan otherwise it will affect the water tightness.

12. The fan should keep away from the children especially the blade and electric parts .And the children are not allowed to operate the fan alone.

13. Do not connect the white signal cable directly to the red signal cable or the external DC power supply. Otherwise, the fan may be damaged.T

14.Please do not perform extraction and insertion of the connector under revolution irrespective of power on and power on and power off , and the fan should not touch or move when running.

15. Do not lift the fan wire when taking the fan, and do not impact the bearing during the handling process.

16. The version change may not be notified, please ask our company for the latest version when necessary.

17.Please be informed that we are not responsible for any damage or accidents caused by violating above rules to install and operate the fan.

NINGBO LONGWELL ELECTRIC TECHNOLOGY CO.,LTD
Phone: 0086 574 6218 9863 FAX : 0086 574 6218 9863 www.longwellfans.com sales@zjlongwell.com

EC Backward Centrifugal Fan	LWBE3G133-072PS-03

Approval

CUSTOMER APPROVAL

CUSTOMER SIGNATURE:	DATE :

Product Data Confirm :

Speed Control System :

☐ PWM ☐ 0-10V

Accessories:

☐ Air Inlet Cone ☐ Pressure nozzle ☐ Custom wire length

Note :Please check and mark the data when you sign the specification sheet .

NINGBO LONGWELL ELECTRIC TECHNOLOGY CO.,LTD
Phone: 0086 574 6218 9863 FAX : 0086 574 6218 9863 www.longwellfans.com sales@zjlongwell.com